HMC045

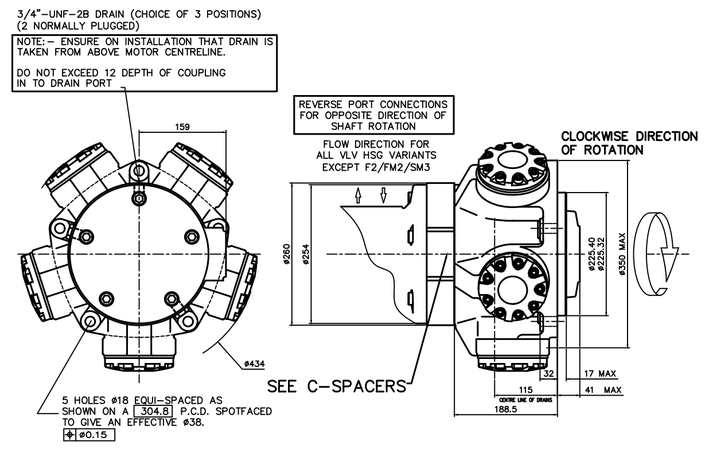

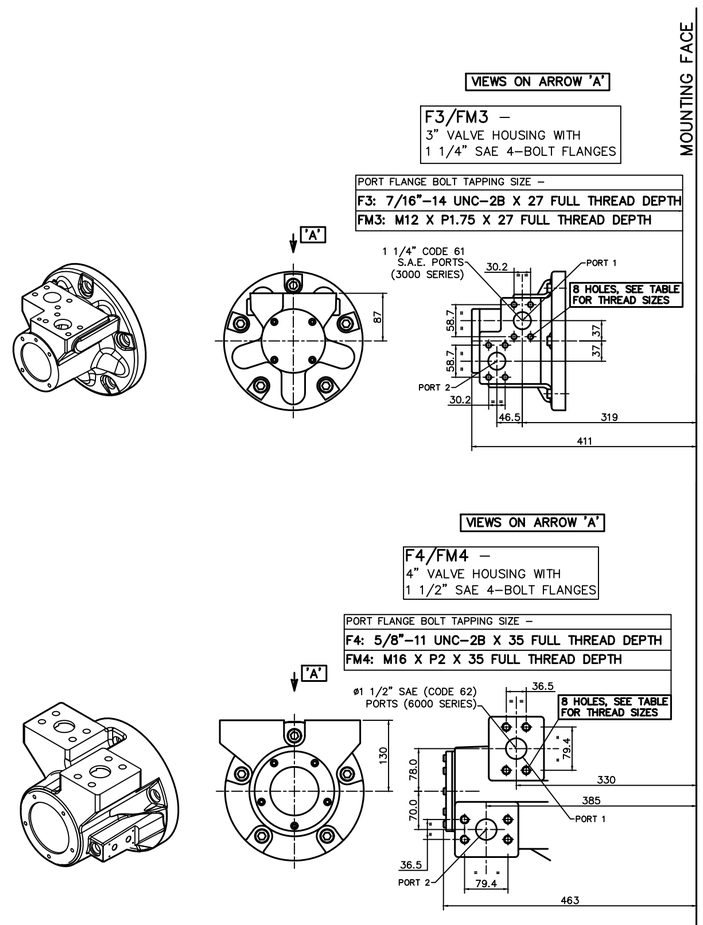

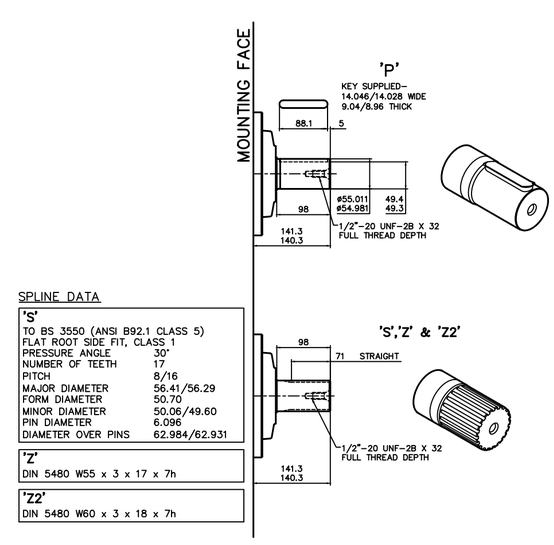

SPLINE DATA

'S'	
TO BS 3550 (ANSI B92.1 CLASS 5)	
FLAT ROOT SIDE FIT, CLASS 1	
PRESSURE ANGLE	30°
NUMBER OF TEETH	17
PITCH	8/16
MAJOR DIAMETER	56.41/56.29
FORM DIAMETER	50.70
MINOR DIAMETER	50.06/49.60
PIN DIAMETER	6.096
DIAMETER OVER PINS	62.984/62.931

'Z'
DIN 5480 W55 x 3 x 17 x 7h
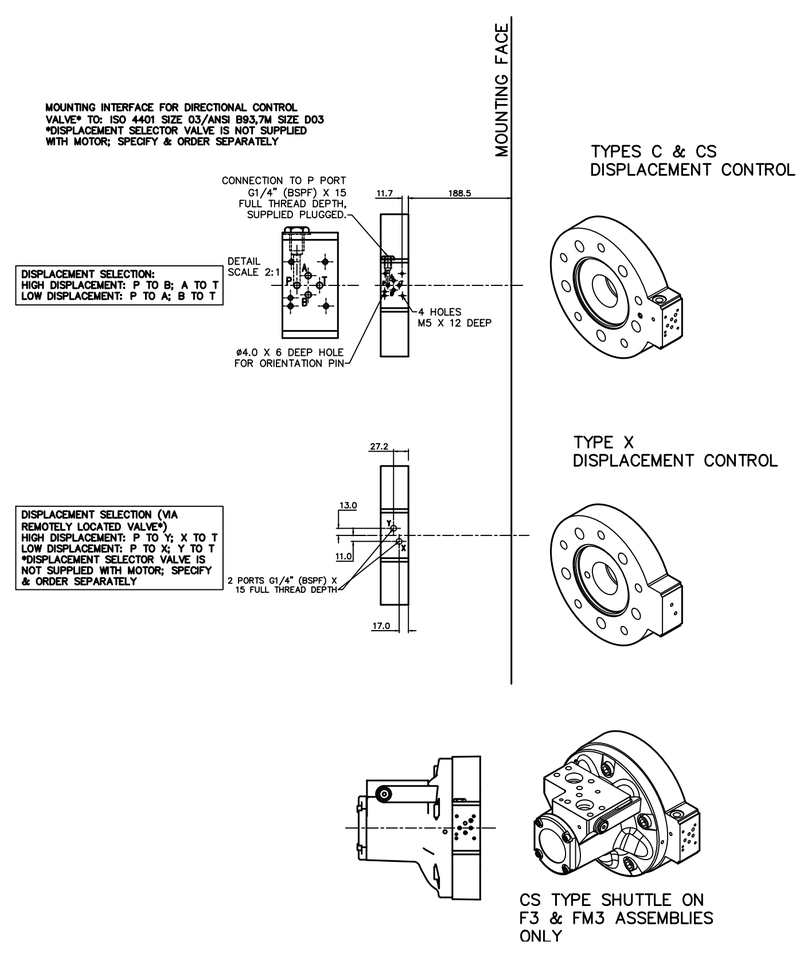
'Z2'
DIN 5480 W60 x 3 x 18 x 7h