	Port name	Port size	On delivery	Tightening torque	N·m (lbf·ft)
A	Delivery port	SAE J518C Std,pressure(code61)1?	Covered with tape	57(42.0)	
B	Suction port	SAE J518C Std,pressure(code61)1 1/2?	Covered with tape	98(72.3)	
D_r	Drain port	SAE J1926/1 Straight thread O-Ring boss 1/2? O.D,take 3/4-16UNF-2B	Attached with steel plug	98(72.3)	
P_L	Load sensing port(Type LO)	SAE J1926/1 Straight thread O-Ring boss 1/4? O.D, take 7/16-20UNF-2B	Attached with steel plug	12(8.7)	
P_e	Pressure control port(Type PO)				
Tair	Air bleeder port	SAE J1926/1 Straight thread O-Ring boss 1/4? O.D, take 7/16-20UNF-2B	Attached with steel plug	12(8.7)	

Notes on mounting and operation

(1) The pump shaft and flange surfaces should be cleaned. Remove an anti-rust material.
(2) Do not apply any form of axial loading to the pump shaft.
(3) The uppermost drain port should be used and the drain piping should be so connected as to keep the casing filled with oil.
(4) Keep the casing pressure below 1 bar (14 psi) normally, and below 4 bar (58 psi) at its peak.
(5) Make sure the drain piping led into the oiltank is kept below the surface of the oil (to prevent airation).
(6) Make sure the suction pressure in the suction flange is kept above 0 bar (0 psi) normally.
(7) Mineral antiwear type hydraulic oil should be used.
(8) For satisfactory service life of the pump in application, the operating fluid should be continuously filtered to a minimum cleanliness level of NAS1638 class 9 or 18/15 to ISO/DIS 4406.
(9) Provide a 150 mesh (100μm) strainer in the suction line.
(10) Install a 10μm filter in the return line.
(11) Allowable oil temperature range : -20~95?.
(12) Oil viscosity range : 10~1000cSt when 200~1000cSt, take warming up before real working.
(13) Caution for the vertical mounting.
The oil level in the tank should be upper than the pump mounting flange. (fig. 1)
if the oil level is lower than the pump level, forced lubrication should be made from the air bleeder port. (flow 1~2 l/min)
(a) Installation within a tank
① Open the drain port and the air bleeder port.
(b) Installation outside a tank (fig. 2)
① Pipe the drain port and the air bleeder port to tank.
② If the pipe for draining or air bleeding is upper than the oil level, it should be filled with oil before starting the pump.

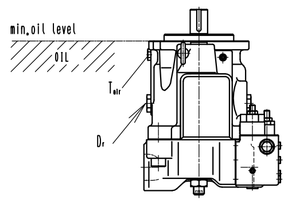

(fig.1)

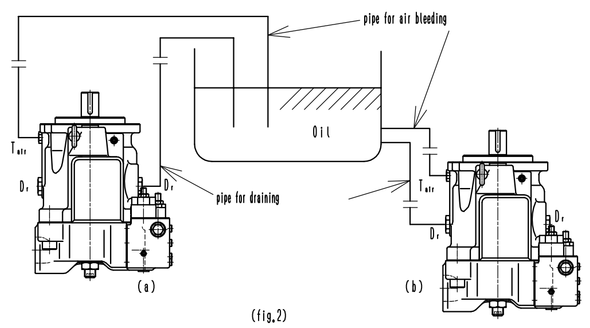

(fig.2)

Operating specifications

Displacement	$cm^3(in^3)$	45(2.75)
Max.self priming speed	min^{-1}	2700 (Clockwise viewed from shaft end)
Rated pressure	bar(psi)	320(4600)
Peak pressure	bar(psi)	350(5000)
Pump model name		K3VL45/B-10R - SS/KM LO/PO/LI

General machining tolerances		Surface roughness(Ra)
Division of dimensions	Tolerance	
63 and under	±0.3	0.5a(▽ , equivalent to S0.2)
Over 63 to 250 incl.	±0.5	3.2a(▽▽ , equivalent to 12,S3)
Over 250 to 1000 incl.	±0.8	0.8a(▽▽▽ , equivalent to 3,2S)
Over 1000 to 2500 incl.	±1.4	0.2a(▽▽▽▽, equivalent to 0,8S)
Over 2500 to 6300 incl.	±2.2	Grade of screw thread : JIS Grade 2

LATEST CHECKER	DRAWN	-	CHECKED 3	-	CHECKED 2	-	CHECKED 1	-	APPROVED	-

Revision

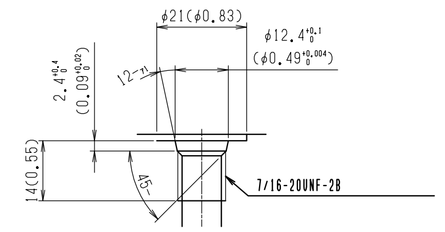

Detail of $P_L(P_e)$,Tair ports(1/1)

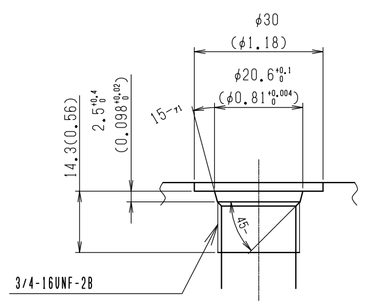

Detail of Dr ports(1/1)

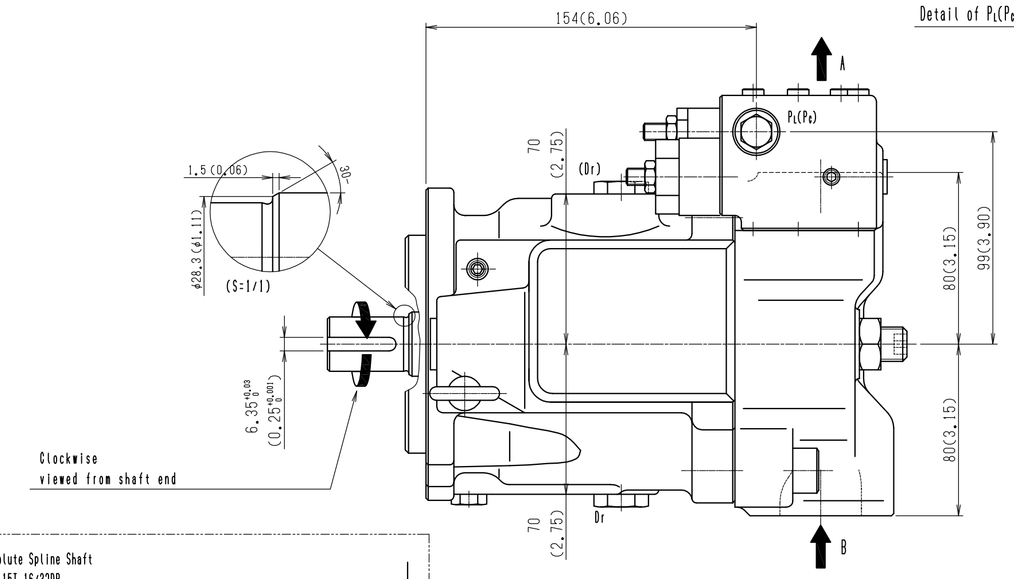

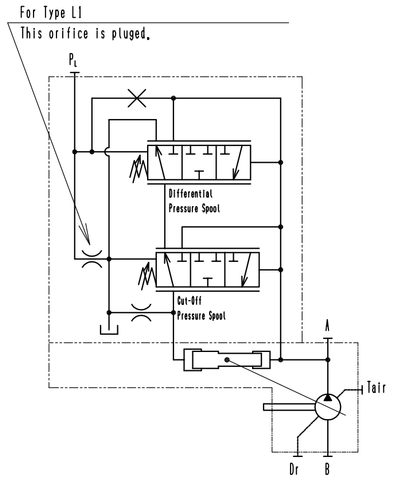

Hydraulic circuit(Type LO,L1)

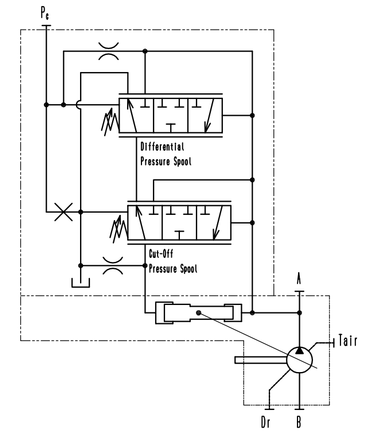

Hydraulic circuit(Type PO)

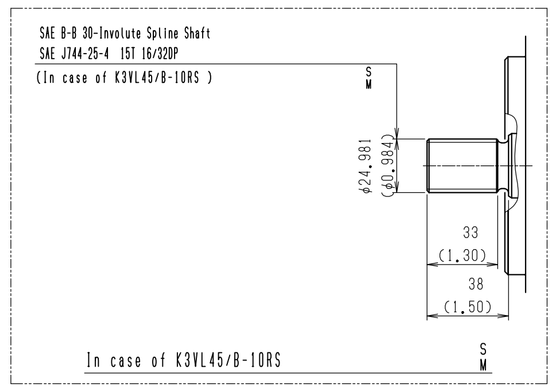

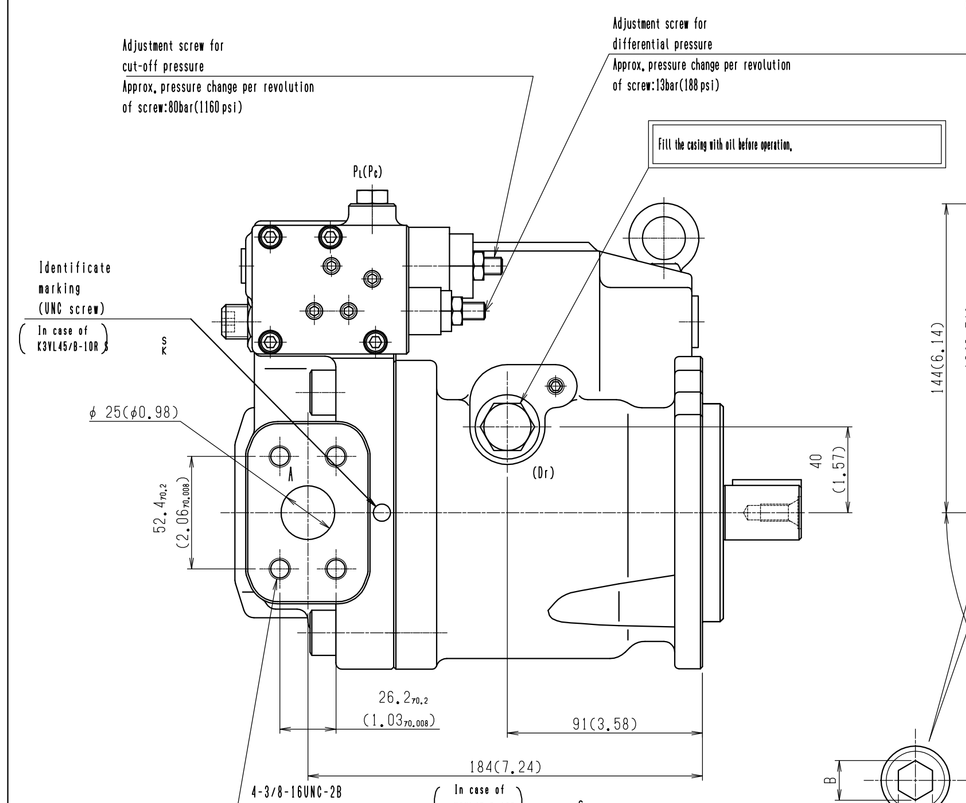

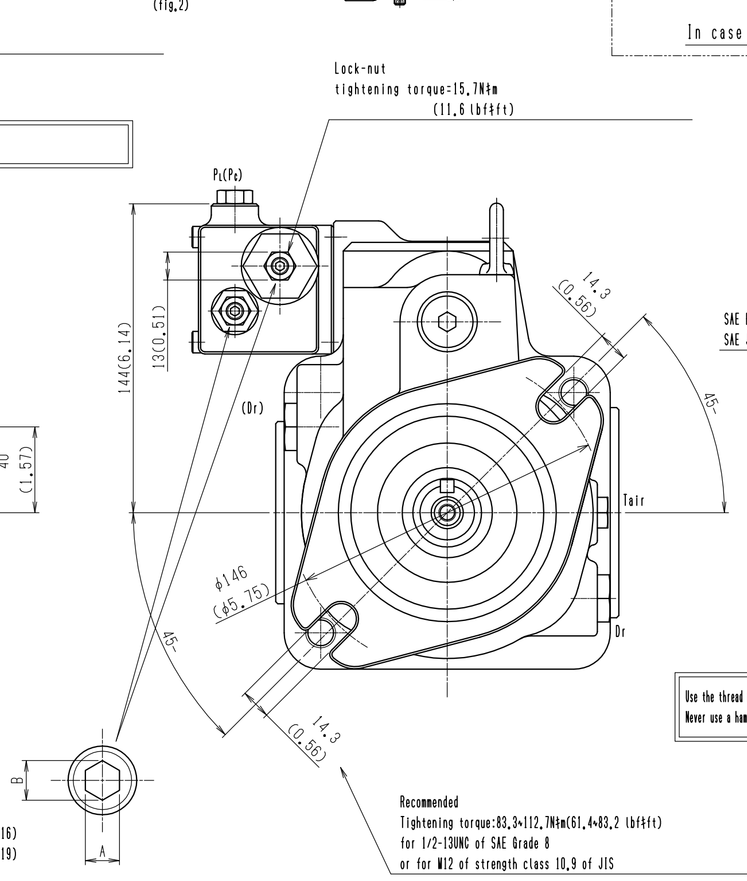

Detail of Adjustment screw (2/1)

Recommended
Tightening torque:83.3~112.7N·m(61.4~83.2 lbf·ft)
for 1/2-13UNC of SAE Grade 8
or for M12 of strength class 10.9 of JIS

Use the thread for fixing the coupling
Never use a hammer.

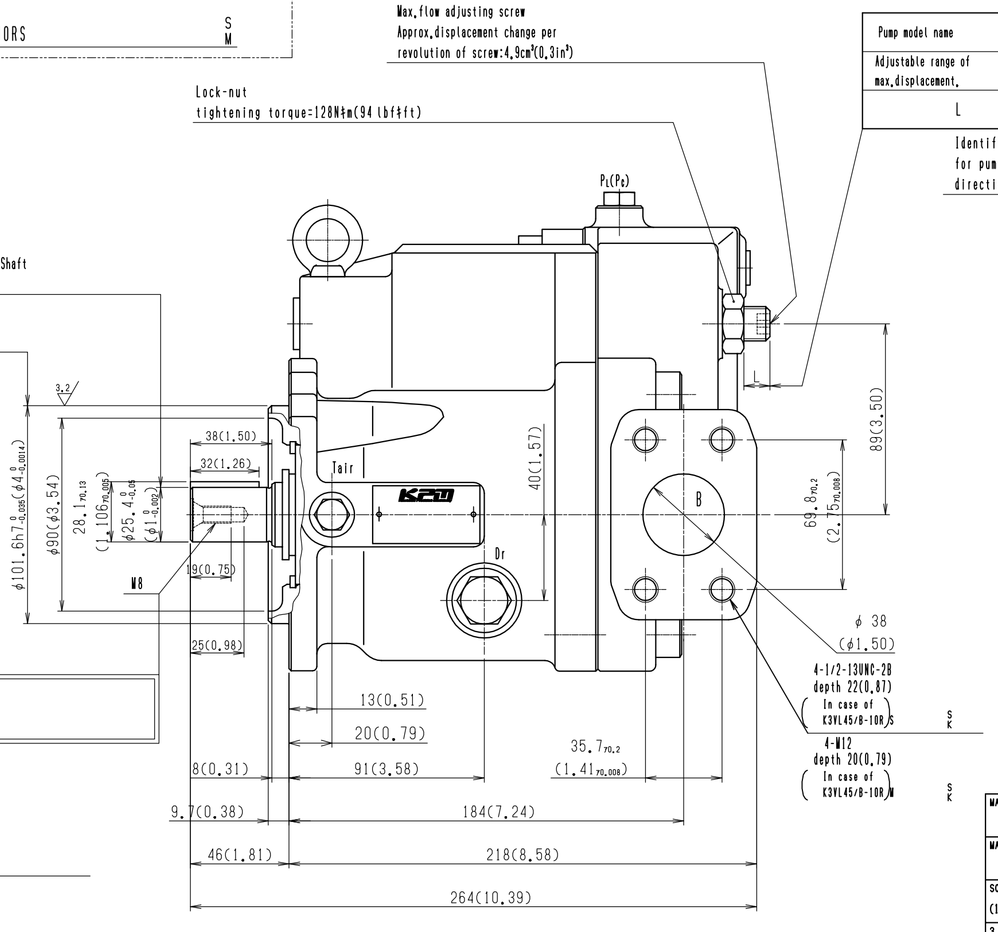

Pump model name		K3VL45/B
Adjustable range of max.displacement.	cm^3 (in³)	16~45 (0.98~2.75)
L	mm (in)	8.5~12.1 (0.02~0.47)

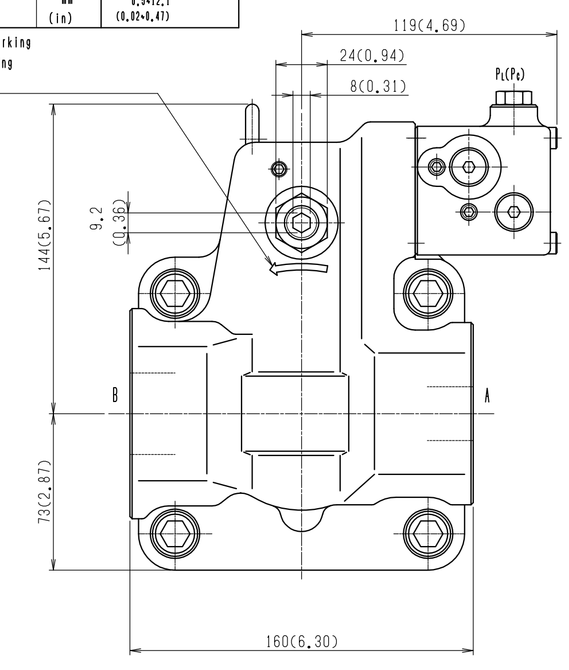

Dimensions are shown in milimeters in principle.
Figures in parentheses are shown in inches

MATERIAL	APPROVED M.Ohnishi	PRODUCT CODE	JOB NO.	RULE
MASS 25 kg	CHECKED 1 K.Watsuda			
SCALE (1/1) 1/2	CHECKED 2 I.Yoshimura	K3VL45/B-10R SS/KM LO/PO/LI		
3 RD ANGLE PROJECTION	CHECKED 3 Y.Wito	INSTALLATION DIMENSIONS		
DATE 2005.04.25	DRAWN Y.Wito	PART NO.	DWG.NO. 02430-4512	

DELIVERY
SPARE
TOTAL

(A1)

KPM Kawasaki Precision Machinery Ltd.